DOCUMENT DATA FORM **Your Name: Nick Carin**

Document Title or Description (max. 254 characters): Circle: Same as cover (or fill in below)

Drawing Book 8 Chapter 1: Concrete general notes slab reinforcement details

Include work order no. and floor no. if applicable

Roll # DB03	Doc. ID (report #, dwg. #):
Document Date: 1968-69	**Document Author Name:**
Author Organization: SHC&R	

KEYWORDS - HIGHLIGHT ALL THAT APPLY

Level 1

Bankers Trust	Project 4	WTC 1 - North Tower	Add
Below Grade	Project 5	WTC 2 - South Tower	
Concourse	Project 6	WTC 3 - Marriot Hotel	
Electrical Substation	Project 7	WTC 4 - South Plaza Bldg.	
Liberty Plaza	Project 8	WTC 5 - North Plaza Bldg	
PATH Station	WFC 1 - Oppenhiemer Dow	WTC 6 - Customs House	
PATH Terminal	WFC 2 - Tower B	WTC 7	
Project 1	WFC 3 - American Express	WTC Complex	
Project 2	WFC 4 - Tower D	WTC Plaza	
Project 3			

Level 2

Accident analysis & risk	Fire protection	Misc. Performance Problems	Structural
Architectural	Fire service	News coverage	Tenant alterations
Data request	Landscaping	Police	Tenant Space
Emergency management	Management	Security	Add
Evacuation	Mech./elec.		

Level 3

1993 explosion	Cranes	Frame	Roof	Weight
A/E fitout	Criteria	Frame analysis	Safety	Weld detail
A-242	Dampers	Frequency	Schedule	Weld size
A-36	Debris	Fuel	Sculpture	Welding
A-497	Deck	Furniture layout	Security system	Wind
Aircraft impact	Deflection	Generators	Shear knuckle	Windows
Air cooled condensers	Demolition	Guidelines	Shear test	Yield strength
Analysis	Design	Gypsum board	Shear Stud	Add
Angles	Detailing	Hat truss	Shop drawings	Drawing books
Antenna	Doors	Human comfort	Shortening	
Artifacts	Drawings	HVAC	Slab	
Asbestos	Eastern States Steel	Index	Slurry wall	
Base plate	Egress	Inspection	Smoke control	Concrete
Beams	Elevator	Insulation	Smoke test	
Bid documents	Elevator Shaft	Job number	Spandrel beam	
Bid Invitation	Emergency communications	Joist	Specifications	
Bow tie	Equipment	L-50	Splices	reinforcement
Bracing	Erection marks	Lighting	Sprinkler	
Bridging truss	Errors & Omissions	Loads	Stability	
Building code	Escalator	Maintenance	Stairways	
Calculations	Expansion joint	Marking	Standards	
Carpet	Exterior columns	Mesh reinforcement	Steel	
Ceilings	Fabrication	Mill inspection	Steel composition	
Certification	Family member	Model	Stiffness	
Chillers	Field survey	Mullion	Structural review	
Cladding	Fire alarms	Operations	Surveillance	
Collapse	Fireproofing	Paint	Survey	
Columns	Fire spread	Partition layout	Survivor	
Communication systems	Fire testing	Partitions	Tenant list	
Composite truss	Firetower	Photos	Tenant occupancy	
Computer output	Flag Pole	Pipes	Testing	
Computer program	Flammability	Plumbing	Tie	
Concrete	Floor	Prestressing	Tolerances	
Connections	Floor load	Probability, uncertainty	Transfer Girders	
Construction	Floor slab	Quality control	Triad	
Contract	Floor system	Ramp	Truss	
Core beams	Floor trusses	Reinforcing (strengthening)	Vestibule	
Core columns	Formwork	Renovation	Vibration	
Corrosion	Foundations	Repair	Walls	
Cracking	Fracture	Research & Development	Water supply	
			Weather	

BOOK 8

CONCRETE

BELOW GRADE

$

TOWER

CHAPTER

1 THRU 3

SKILLING, HELLE, CHRISTIANSEN, ROBERTSON — Structural & Civil Engineers

PROJECT	TITLE	DATE
THE WORLD TRADE CENTER	CONCRETE GENERAL NOTES	3-1-68

REVISIONS

1-22-69

12- 1-70

STRUCTURAL CONCRETE GENERAL NOTES

1. All structural concrete shall conform to "ACI Standard Building Code Requirements for Reinforced Concrete" (ACI 318-63), except where specifically modified, supplemented or superseded by the Specifications or specific notes in the Drawings.

2. Refer to Architectural Drawings for openings, architectural treatments and dimensions not shown. Refer to Mechanical, Electrical and Architectural Drawings for size and location of all ducts, piping, conduits, reglets, inserts, etc.

3. Structural steel and floor panels are imprinted on the concrete drawings for orientation only. For actual dimensions and other data, refer to the applicable Drawings.

4. Mixing and placing of all concrete and selection of material shall conform to the Specifications. Refer to the Specifications for concrete mix design requirements.

5. Stone concrete (Normal weight concrete) or lightweight concrete (Lightweight sructural concrete) to be used in each floor is indicated in Drawings or in the table below, or both.

Sub level 5 & 4	f'c 3000 psi stone concrete
Sub level 3	f'c 4000 psi stone concrete
Sub level 2 & 1	f'c 4000 psi stone concrete
Service level & Floor 1	f'c 3000 psi stone concrete
Intermediate level	f'c 3000 psi stone concrete
Floor 2	f'c 3000 psi lightweight concrete
Floor 3 thru 6 inclusive	f'c 3000 psi stone concrete
Floor 7	f'c 4000 psi stone concrete
Floor 8 & 9	f'c 3000 psi stone concrete
Floor 10 thru 40 incl.	f'c 3000 psi lightweight concrete
Floor 41, 42 & 43	f'c 3000 psi stone concrete
Floor 44 thru 74 incl.	f'c 3000 psi lightweight concrete
Floor 75, 76 & 77	f'c 3000 psi stone concrete
Floor 78 thru 106 incl.	f'c 3000 psi lightweight concrete
Floor 107	f'c 4000 psi stone concrete
Floor 108 thru PH Roof incl.	f'c 3000 psi stone concrete

6. The ultimate strength mehtod has been used in design of the concrete work shown in the Drawings.

7. The slab thicknesses and finish elevations of concrete immediately after placement shall conform to screeding diagrams supplied by the Engineer. See Specifications.

8. Concrete which will bond with previously placed concrete at a construction joint shall not be placed until the existing concrete at the construction joint has been cured a minimum of 40 hours.

PRECAST CONCRETE

1. Refer to Architectural Drawings for openings, details and dimensions not shown.

2. Strength (f'c) shall conform to the strength shown in the Drawings. Where no strength is shown in the Drawings, f'c shall be 3000 psi, except that facing concrete, where called for, shall be f'c = 5000 psi.

3. Contractor shall submit design mixes for approval by the Engineer. Reinforcing steel has not been provided to resist stripping, handling or erection stresses. Where required, Contractor shall provide reinforcing steel, stiffeners, bracing, etc. to resist erection stresses. Lifting inserts, etc. have not been shown. Where required, inserts shall be installed in locations where they will be covered by the construction.

LICENSED PROFESSIONAL ENGINEER — LESLIE E. ROBERTSON — No. 34360 — UNIVERSITY OF THE STATE OF NEW YORK

DESIGNED

DRAWN S. A.

REVIEWED

SKILLING-HELLE-CHRISTIANSEN-ROBERTSON — Civil & Structural Engineers

PROJECT THE WORLD TRADE CENTER | TITLE CONCRETE GENERAL NOTES | DATE 3-1-68

REVISIONS

8-20-68

REINFORCING STEEL

1. Reinforcing bars shall conform to ASTM A432 (60 ksi), unless specifically noted in the Drawings. #2 smooth reinforcing bars shall conform to ASTM A15, Intermediate Grade.

2. All welded wire fabric shall conform to ASTM A185 unless specifically noted in the Drawings.

3. Detailing of reinforcement and accessories (such as [illegible] shall conform to "Standard Practice for Detailing Reinforced Concrete Structures" (ACI 315-65).

4. Subject to the Engineer's approval of relevant details and construction procedures, the Contractor may replace reinforcing bars in whole or in part with welded wire fabric as follows:

   a) Where the Contractor elects to exercise the option to replace reinforcing bars with welded wire fabric, A432 bars may be replaced by an equal sectional area of welded wire fabric complying with the Specifications. Smooth welded wire fabric and deformed welded wire fabric without certifying tests shall be considered to have a yield point of 60 ksi after fabrication.

   b) Where deformed welded wire fabric is shown by certified test to possess a strain of 0.003 or less at 70 ksi and exhibits a crack width of 0.015" or less at 56 ksi, in conformance with ACI Code Section 1508 (b), deformed welded wire fabric may be regarded as more efficient than A432 bars in the ratio of 70 to 60, and the required sectional areas for replacement of A432 reinforcement may be calculated on this basis.

   c) In no case shall less than the minimum reinforcement required in ACI Code Section 807 (a) be furnished. This requirement applies to both the longitudinal and the transverse directions.

   d) Area of reinforcement cut at "knuckles" of floor trusses or other obstructions shall be restored by providing additional reinforcement equal to the area cut.

5. Reinforcing bars shall be spliced by lapping. Splices shall be staggered, with centers of adjacent splices longitudinally separated a minimum of 44 bar diameters. Minimum length of lap shall be as shown in the Drawings. Welded wire fabric shall be spliced in accordance with ACI Code Section 805 (f) 1, wherever specific splicing provisions are not shown in the Drawings or included in the Specifications.

6. Welding of reinforcing bars, where permitted by the Engineer, or shown in the Drawings, shall conform to the provision of AWS D12.1 and shall be performed by approved, certified welders.

7. Minimum concrete cover at all openings, sleeves, "knuckles" of floor trusses, structural steel penetrating through or into slabs, and other obstructions shall conform to ACI 318-63. The amount of reinforcement placed in a given band or strip, at an obstruction, shall be at least equal to that calculated from the full band width and the spacing shown, unless otherwise noted.

8. Where different spacings are shown for adjacent bands or strips of reinforcement, the distance between the first bar in adjacent bands or strips shall not exceed the average of the spacings in the adjacent bands or strips.

9. Reinforcement parallel to P/T (Power/Telephone) cells shall be placed outside the width of the P/T cell, except where approved by the Engineer.

10. Bar spacings shown in the Drawings (such as "#3 @ 12") are nominal and minimum requirements. For specific required spacings, see the applicable details or sections in the Drawings.

11. Lengths of bars shown in the Drawings do not include additional length needed for hooks or bends, where required.

12. The symbol "T" means "top" and the symbol "B" means "bottom". All bars shown in plan view without a symbol "T" or "B" are bottom bars, except where specifically noted or shown in details. The designation "10#5 T & B", and similar designations, shall mean 10 top bars and 10 bottom bars, not 10 bars total.

LICENSED PROFESSIONAL ENGINEER — LESLIE E. ROBERTSON — No. 24360 — UNIVERSITY OF THE STATE OF NEW YORK

8-AB1-2.2

SKILLING-HELLE-CHRISTIANSEN-ROBERTSON — Civil & Structural Engineers

PROJECT	TITLE	DATE
THE WORLD TRADE CENTER	CONCRETE GENERAL NOTES	3-1-68

REVISIONS

5/31/68
8/27/69
12-1-70

MISCELLANEOUS

1. Section indicators are indicated by a letter and a drawing reference. Thus $\frac{F}{8\text{-}AB3\text{-}2}$ means section F-F in Drawing Book 8 page 8-AB3-2 and $\frac{F}{SCB\text{-}145}$ means section F-F on Drawing SCB-145.

2. Details indicated 8-AB3-10E means Detail E in Drawing Book 8 page 8-AB3-10.

3. Page numbers in Drawing Book 8 which include more than one page are numbered 2.1, 2.2, 2.3, etc. Page numbers which include only one page are numbered 2 with no decimal. Where reference is made to page numbers with more than one page, the decimal portion of the page number is not included. Therefore, a section referenced to page 8-AB3-2 may be on 8-AB3-2.1, 2.2, etc.

4. Top of steel beam below reference floor are typically as follows except where indicated on Structural Steel Drawings.

	Core	Floor
Intermediate	+14'-0" above Floor 1	-
2nd	-6½"	-6½"
3 thru 6	-4"	-
7,41,75,108	-7½"	-9½"
8	+12'-0" above Floor 7	as noted
9,43,77	-7½"	-9½"
10-40,45-74,79-106	-4"	-5½" where applicable
42	+13'-6½" above Floor 41	as noted
44,78	-6½"	-5½"
76	+13'-6½" above Floor 75	as noted
107	-7½	-7 3/4
109	+13'-6½" above Floor108	as noted
110	-7½	-4
FH	-4"	-4"

5. Specific details and notes shall prevail over general details and notes.

   Any conflict or apparent conflict between drawings and/or notes shall be submitted to the Engineer for his decision, before construction or preparation of shop drawings is begun.

DRAWING BOOK 8 CONTENTS

8-AB0-0	Date page
8-AB1-	General Notes & Typical Details
8-AB2-	Details - Floor
8-AB3-	Details - Core
8-AB4-	Details - Floor 1 & Below
8-JK5-	Typical Details Slabs & Beams
8-JK6-	Typical Details
8-JK7-	Details Walls
8-JK8-	Details
8-AK9-	Void
8-AB10-	Details Floor 107-PH Roof

6. Where no top steel occurs over either group of conduits or large conduits add #4 @ 12" oc perpendicular to conduit. Additional steel shall extend a minimum of 40 bar diameters past conduit.

7. At all reentrant corners created by construction joints add 2 #5 bars bottom in tower and 2 #5 bars top and bottom in Plaza. Additional bars shall be 5'-0" long.

LICENSED PROFESSIONAL ENGINEER — LESLIE E. ROBERTSON — No. 34360 — UNIVERSITY OF THE STATE OF NEW YORK

SKILLING - HELLE - CHRISTIANSEN - ROBERTSON Structural & Civil Engineers

PROJECT THE WORLD TRADE CENTER | TITLE TYPICAL SLAB REINFORCING DETAIL | DATE 3-1-68

REVISIONS

8-20-68

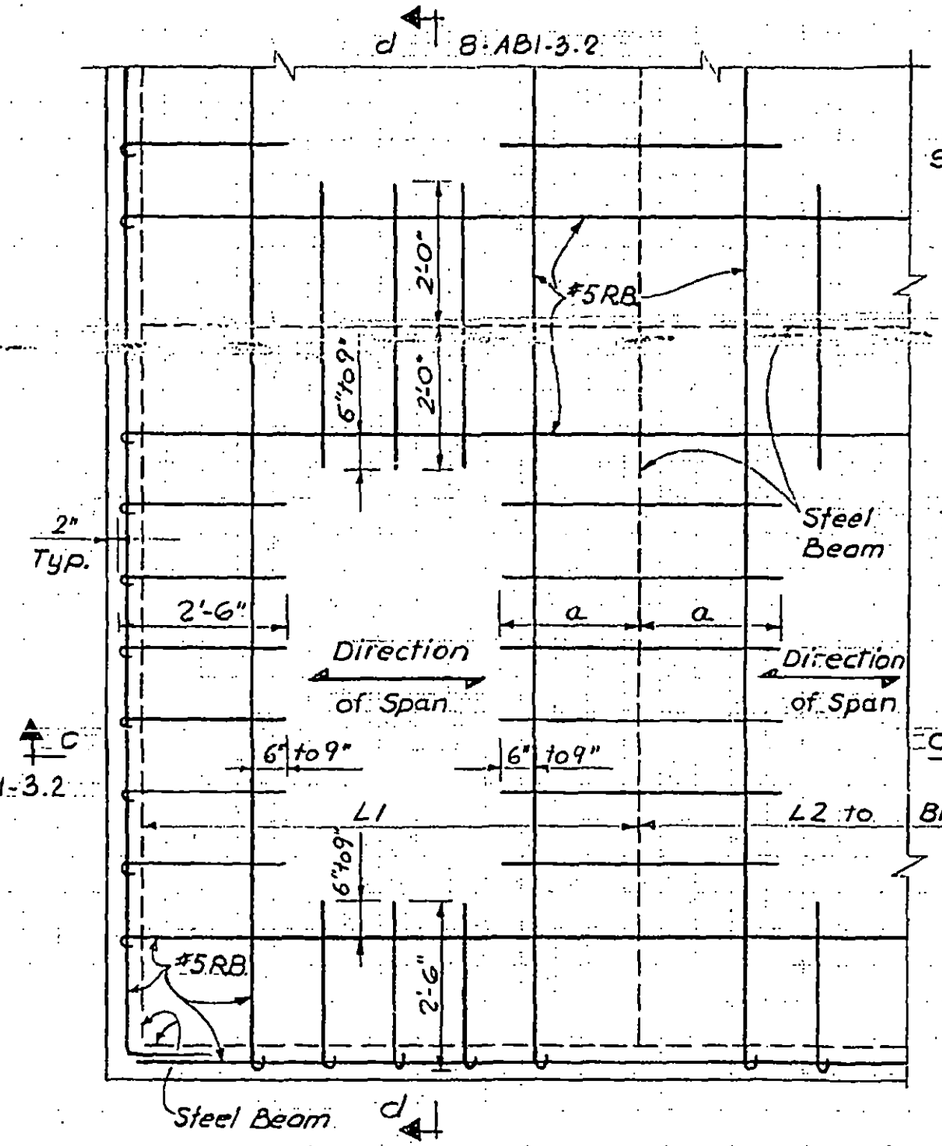

Detail A

Typ. Arrangement of Top Bars

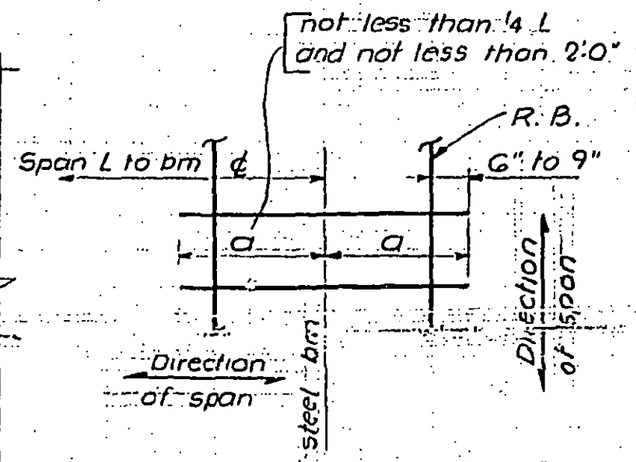

Detail B

Top Bars where Direction of Span Changes

Notes:

1. Max. spacing of Raiser Bars supporting #4 top reinf. or heavier is 4'-0". Provide raiser bars additional to those shown as required.
2. Max. spacing of R.B. supporting #3 reinf. is 2'-0". Provide required R.B's, optionally, #3 top bars may be replaced by an equivalent amount of #4 bars (#4 @12" min), subject to Engineer's approval.

LICENSED PROFESSIONAL ENGINEER
LESLIE E. ROBERTSON
No. 34360
UNIVERSITY OF THE STATE OF NEW YORK

8-ABI-3.1

WORTHINGTON, SKILLING, HELLE & JACKSON Civil & Structural Engineers

PROJECT THE WORLD TRADE CENTER | TITLE TYPICAL SLAB REINF. DETAIL | DATE 3-1-68

REVISIONS

8-20-68

8-AB1-3.1

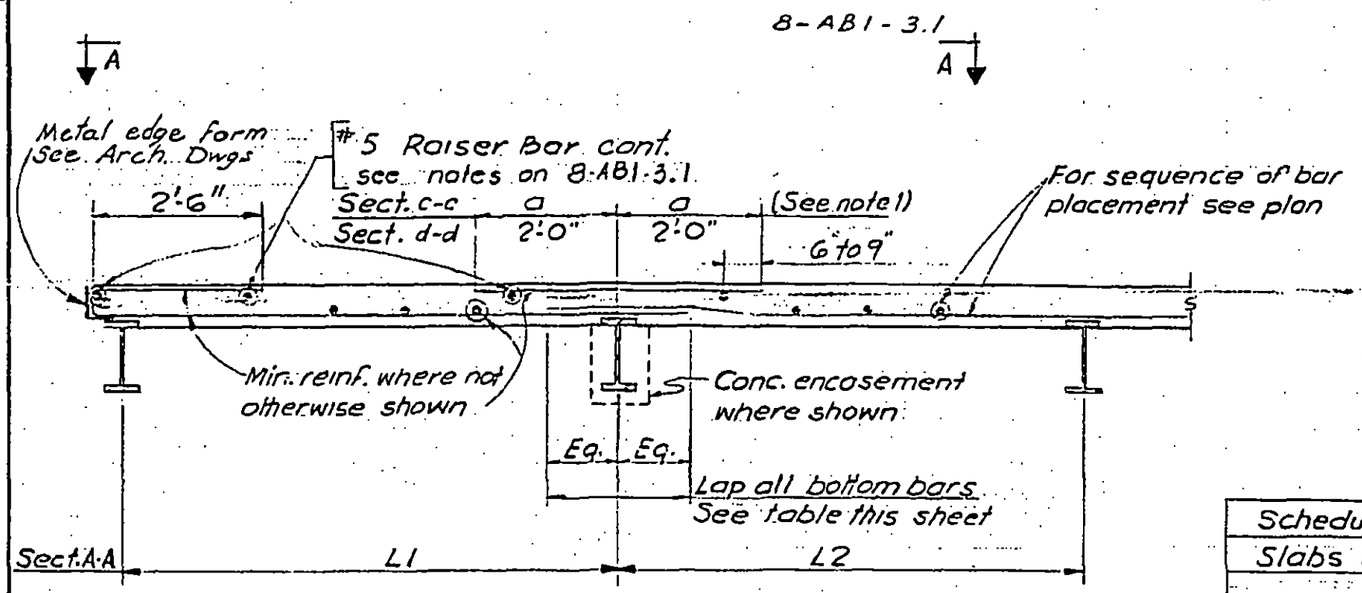

Required Lap	
Bar size	Min. lap
#3	1'-4"
#4	1'-10"
#5	2'-3"
#6	2'-8"
#7	3'-2"
#8	3'-7"

Where bars of different sizes are lapped, the lap listed for the smaller size is acceptable

Schedule of minimum reinf.
Slabs 5" thick or less - #3@12
5¼" to 6" thick - #3@10
6¼" to 8" thick - #4@12

Length of Bars
Section c-c & d-d

4. Detail 8-AB1-3 applies only where not otherwise shown, thus it does not apply to items covered by details 8-AB2 in slabs on steel deck.

NOTES:

1. For bars running in the direction of the span, "a" shall be not less than ¼L, where L is the longer of L1 and L2. Furthermore, for all bars, including those normal to the direction of the span, "a" shall be not less than 2'-0".

2. Continuous top bars shall be spliced by lapping at midspan

3. Provide bottom reinf. in all slabs, including cantilevers, at least equal to the scheduled minimum each way.

LICENSED PROFESSIONAL ENGINEER LESLIE E. ROBERTSON No. 34360 UNIVERSITY OF THE STATE OF NEW YORK

8-AB1-3.2

SKILLING, HELLE, CHRISTIANSEN, ROBERTSON — Structural & Civil Engineers

PROJECT: THE WORLD TRADE CENTER | TITLE: TYPICAL SLAB REINFORCING DETAIL | DATE: 10-24-69

REVISIONS

Note: Interrupt R.B. at diagonals.

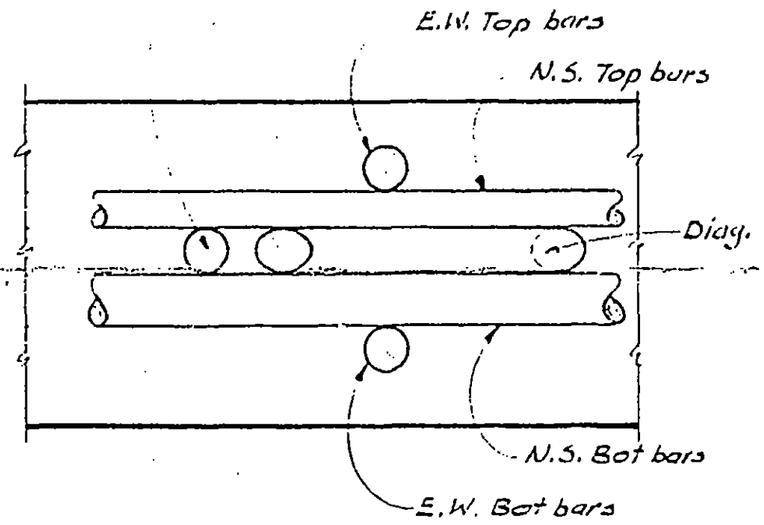

Detail E

Note: Interrupt R.B. at diagonals.

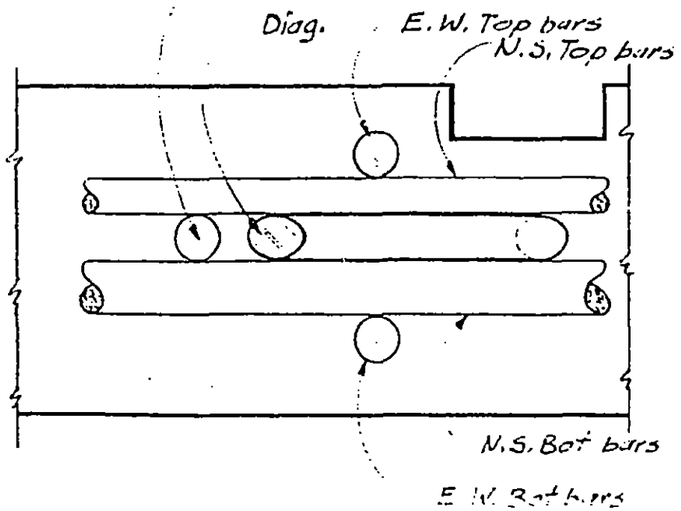

Detail F

LICENSED PROFESSIONAL ENGINEER — LESLIE E. ROBERTSON — No 34360 — UNIVERSITY OF THE STATE OF NEW YORK

DESIGNED

DRAWN: J. Gricius

REVIEWED

8-AB1-3.3

SKILLING - HELLE - CHRISTIANSEN - ROBERTSON Structural & Civil Engineers

PROJECT THE WORLD TRADE CENTER | TITLE TYPICAL CONSTRUCTION JOINT DETAILS | DATE 3-1-68

REVISIONS

1-28-69

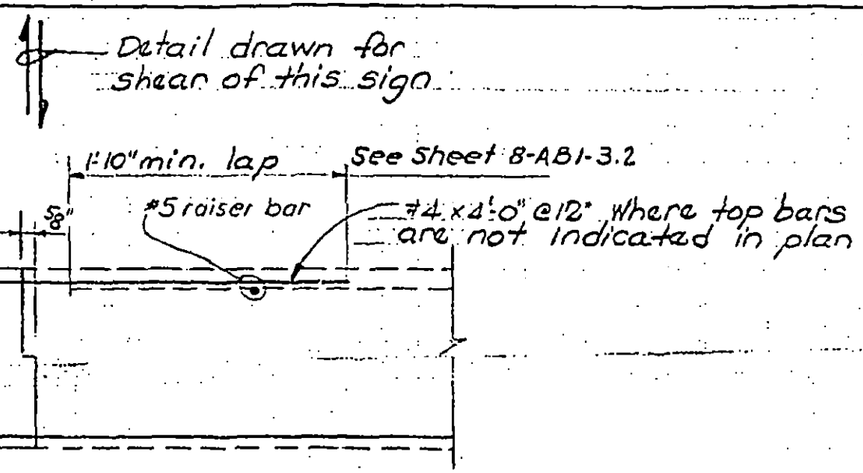

Detail A

TYPICAL CONSTRUCTION JOINT IN SLAB

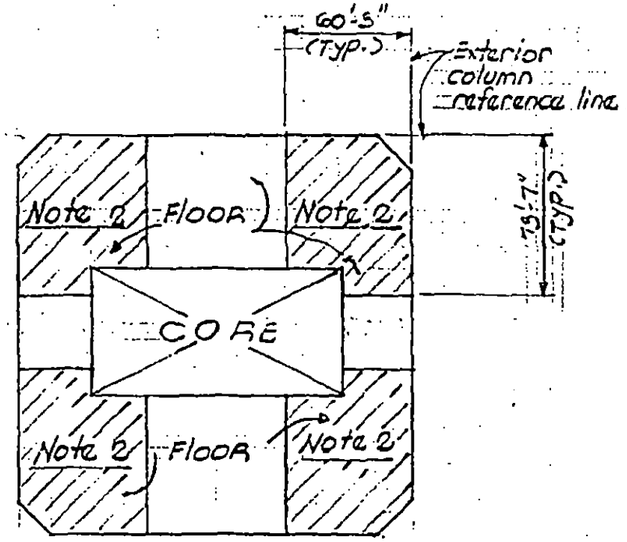

Notes:

1. Construction joints shall be located on lines of zero or low shear in the slab, in the middle ¼ of the slab or over a supporting beam or truss.
2. Construction joints shall be located so as to cross beams or trusses near their ends. In the corners of truss floors, where trusses run both ways, construction joints are not permitted.
3. Proposed sequence of concreting and (exact) location of construction joints shall be submitted to the Engineer for approval in shop drawings.
4. Joints to be thoroughly cleaned of base material and coated with holding agent prior to completion.
5. In a typical floor (outside core) locate construction joints approximately as plan at left.

8-AB1-4.1

LESLIE E. ROBERTSON REGISTERED PROFESSIONAL ENGINEER No. 34360 UNIVERSITY OF THE STATE OF NEW YORK

SKILLING - HELLE - CHRISTIANSEN - ROBERTSON Structural & Civil Enginoors

PROJECT THE WORLD TRADE CENTER | TITLE TYPICAL CONSTRUCTION JOINT DETAILS | DATE 3-1-68

REVISIONS

Condition when concrete on both sides of joint is at the same elevn. shown dotted.

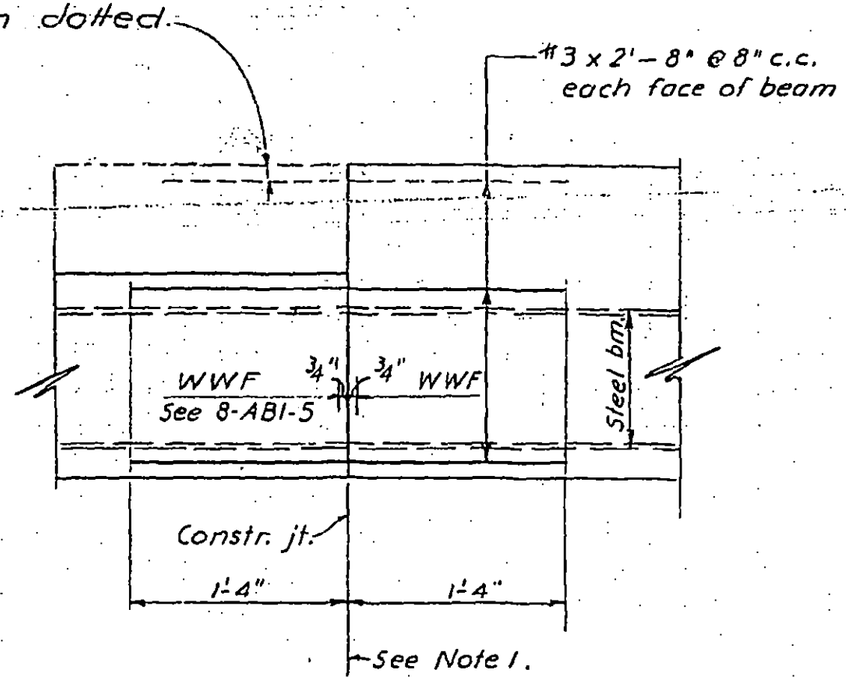

Detail B

TYPICAL CONSTRUCTION JOINT IN CONCRETE FIRE PROOFING.

Notes:
1) Joint to be thoroughly cleaned of loose material prior to completion.

LICENSED PROFESSIONAL ENGINEER LESLIE E. ROBERTSON No. 84360 STATE OF NEW YORK

8-ABI-4.2

SKILLING, HELLE, CHRISTIANSEN, ROBERTSON — Structural & Civil Engineers

PROJECT: TIIE WORLD TRADE CENTER | TITLE: TYPICAL CONSTRUCTION JOINT DETAILS | DATE: 4-8-69

REVISIONS

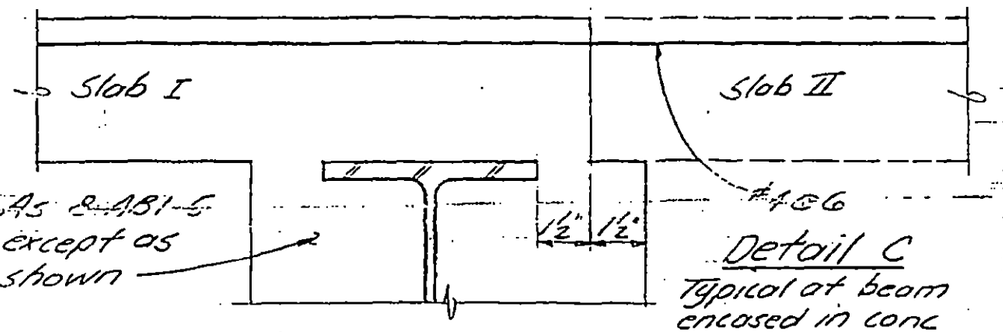

Detail C
Typical at beam encased in conc

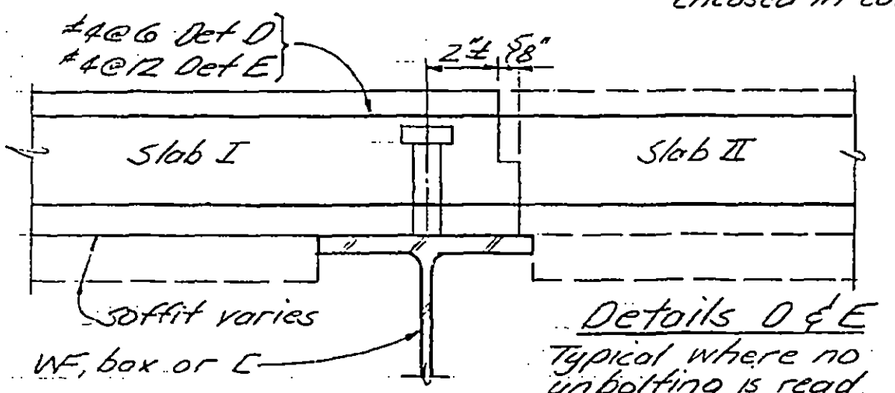

Details D & E
Typical where no unbolting is req'd

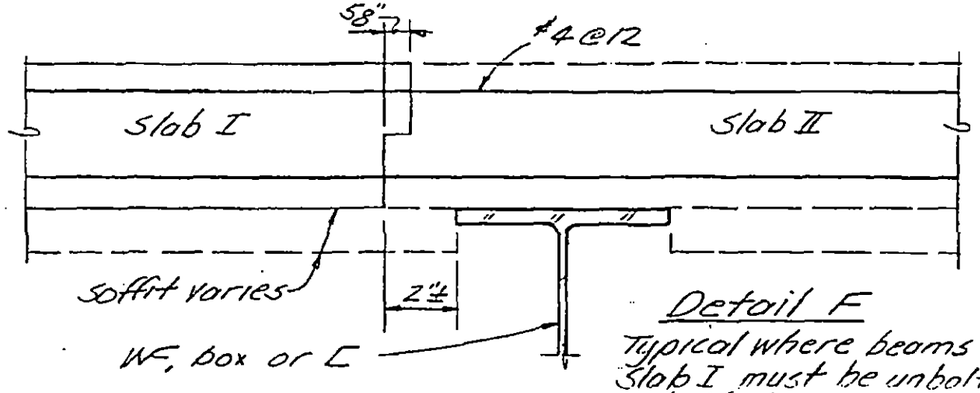

Detail F
Typical where beams under Slab I must be unbolted and rebolted

NOTES:
1. Joints to be thoroughly cleaned of loose material prior to completion.
2. Projecting ends of dowels that must be temporarily displaced shall be bent horizontally and carefully restraightened before placing Slab II.
3. For raiser bars, length of dowels and other details see sheets 8-AB1-4.1 and 8-AB1-3.1 and 3.2.

LICENSED PROFESSIONAL ENGINEER
LESLIE E. ROBERTSON
No. 34360
UNIVERSITY OF THE STATE OF NEW YORK

DESIGNED A.L.A.
DRAWN J. Adams
REVIEWED

8-AB1-4.3

SKILLING - HELLE - CHRISTIANSEN - ROBERTSON Structural & Civil Engineers

PROJECT THE WORLD TRADE CENTER | TITLE TYPICAL BEAM FIREPROOFING DETAILS | DATE 3-1-68

REVISIONS

1-28-69

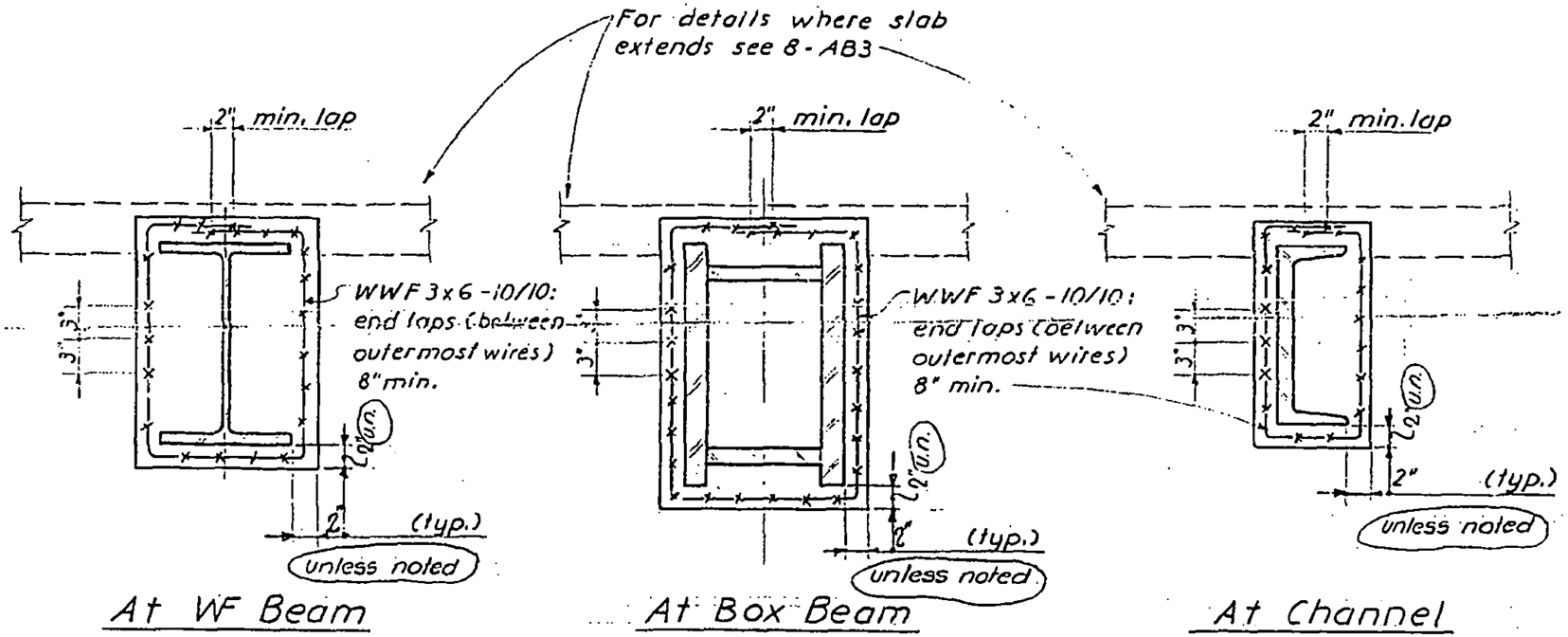

Detail A

Notes:

1. For required chamfers and other features see Archt. Dwgs. and Specifications.
2. WWF may be replaced with reinf. assembled and installed in place. See 8-AB1-5.4

8 AB1-5.1

SKILLING - HELLE - CHRISTIANSEN - ROBERTSON Structural & Civil Engineers

PROJECT THE WORLD TRADE CENTER | TITLE TYPICAL BEAM FIREPROOFING DETAILS | DATE 3-1-68

REVISIONS

8-20-68

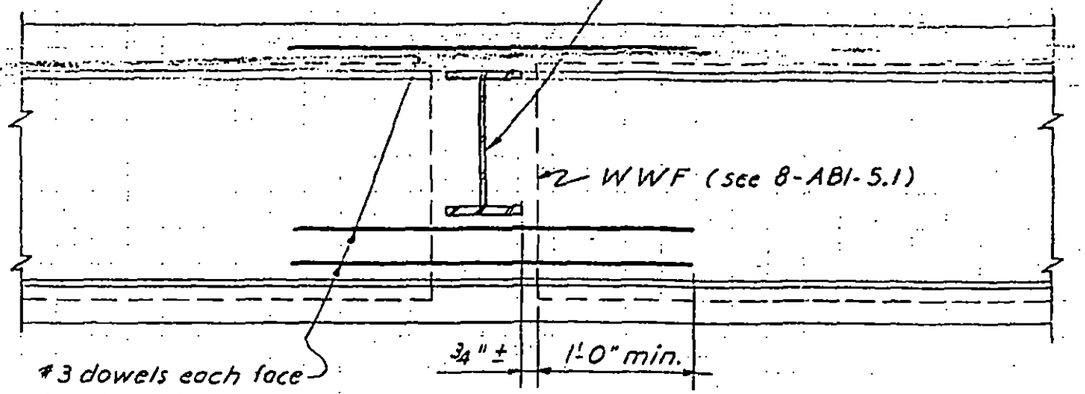

Notes:

1) Provide at least 1-#3 dowel for each 5" of WWF cut. Place half of the number of dowels uniformly at each side of the obstruction. Optionally, WWF (equal in sectional area to the amount of WWF cut) may be used in lieu of #3 dowels.

LICENSED PROFESSIONAL ENGINEER LESLIE E. ROBERTSON No. 34360 UNIVERSITY OF THE STATE OF NEW YORK

DETAIL WHERE WWF IS INTERRUPTED

DETAIL B

8-ABI-5.2

SKILLING - HELLE - CHRISTIANSEN - ROBERTSON Structural & Civil Engineers

PROJECT THE WORLD TRADE CENTER | TITLE TYPICAL BEAM FIREPROOFING DETAILS | DATE 3-1-68

REVISIONS

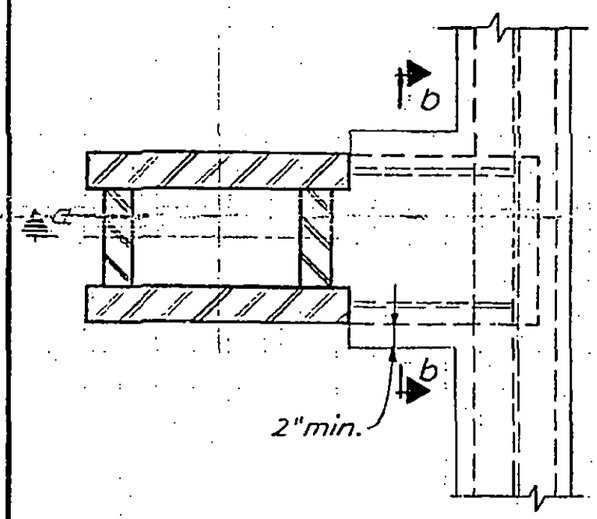

PLAN

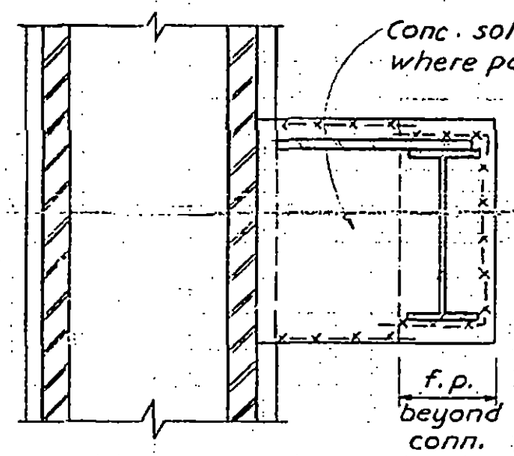

Section a-a

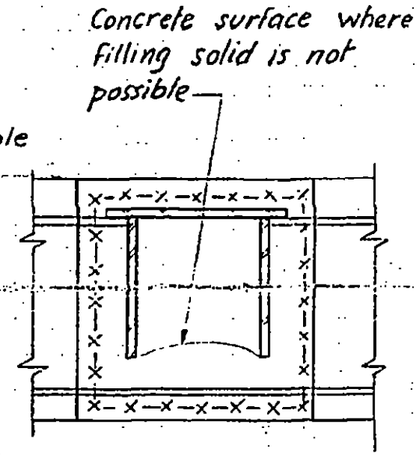

Section b-b

DETAIL WHERE INSIDE OF STEEL CONN. IS INACCESSIBLE

DETAIL C

8 ABI-5.3

SKILLING, HELLE, CHRISTIANSEN, ROBERTSON — Structural & Civil Engineers

PROJECT THE WORLD TRADE CENTER | TITLE TYPICAL BEAM FIREPROOFING DETAILS | DATE 1-28-69

REVISIONS

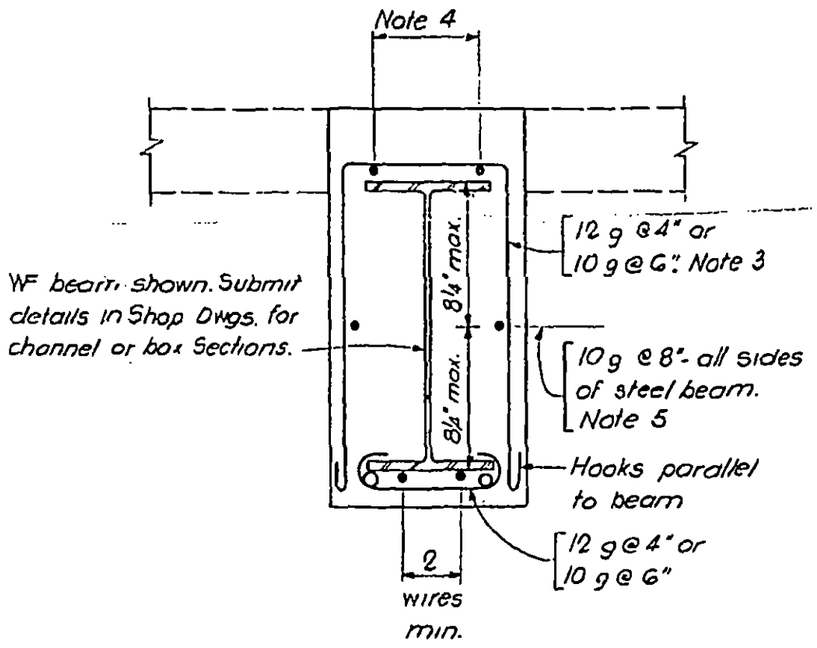

Detail D

Notes:

1. Reinf. incl. soffit clips shall conform to ASTM. Spec. A82
2. Gages are USSWG (6 g = 0.192" dia, 8 g = 0.162" dia, 10 g = 0.135" dia, 12 g = 0.1055" dia.)
3. Where beam is contiguous with slab, 8 g @ 10" or 6 g @ 12" may be substituted.
4. Omit longitudinal top reinf. on the side where slab is contiguous.
5. Longitudinal reinf. may be placed inside of stirrups and clips (as shown), or outside, & may be tied to form hangers, instead of tying to stirrups.
6. Splice longitudinal reinf. by lapping 60 dia.
7. Where longitudinal reinf. is cut at connected beams or other obstructions provide properly spliced replacement.
8. For details not shown see 8-AB1-5.1

LICENSED PROFESSIONAL ENGINEER — LESLIE E. ROBERTSON — No. 34360 — UNIVERSITY OF THE STATE OF NEW YORK

DESIGNED

DRAWN G. T. H.

REVIEWED

8-AB1-5.4

SKILLING - HELLE - CHRISTIANSEN - ROBERTSON Structural & Civil Engineers

PROJECT THE WORLD TRADE CENTER | TITLE TYPICAL CONCRETE FIREPROOFING OF COLUMNS | DATE 3-1-68

REVISIONS

5/31/68
8-20-68
1-28-69

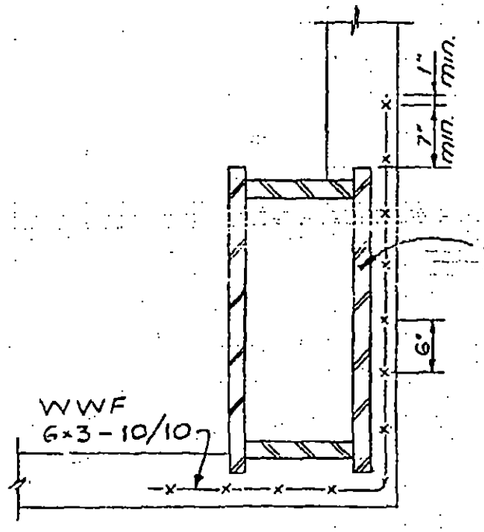

Detail A

TYPICAL AT CORNER

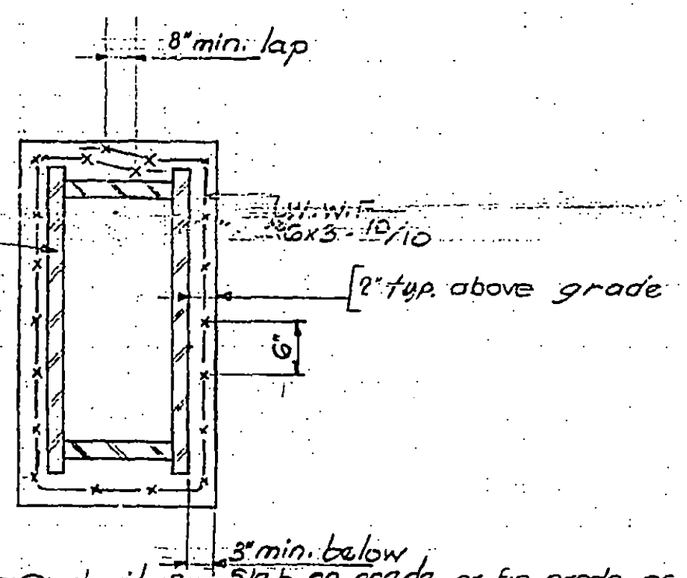

Detail B

TYPICAL WHERE INDICATED ON PLANS
TYPICAL AT ALL BELOW GRADE COLUMNS

LICENSED PROFESSIONAL ENGINEER
LESLIE E. ROBERTSON
No. 34360
CITY OF THE STATE OF NEW YORK

Notes:

1. For required chamfers and other features see Archit. Dwgs & Specifications
2. Welded wire fabric may be replaced by equivalent reinforcement

S-AB1-6

SKILLING - HELLE - CHRISTIANSEN - ROBERTSON Structural & Civil Engineers

PROJECT	TITLE	DATE
THE WORLD TRADE CENTER	TYPICAL SLAB OPENING DETAILS	3-1-68

REVISIONS

8-20-68

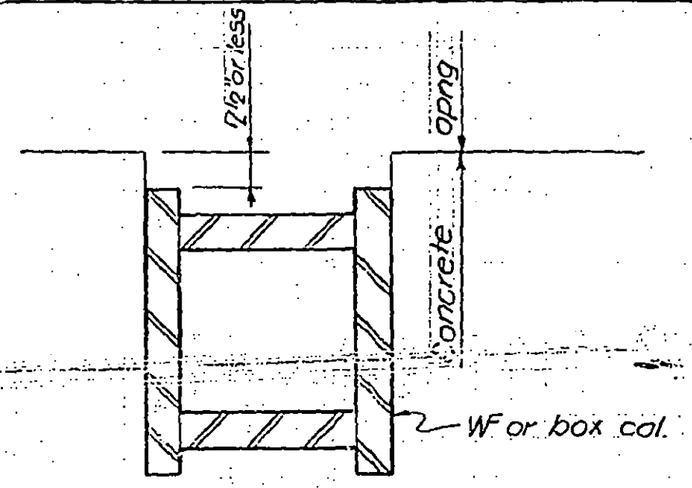

Note:
Where thickness of concrete is 12" or more use Det. 8-A81-G

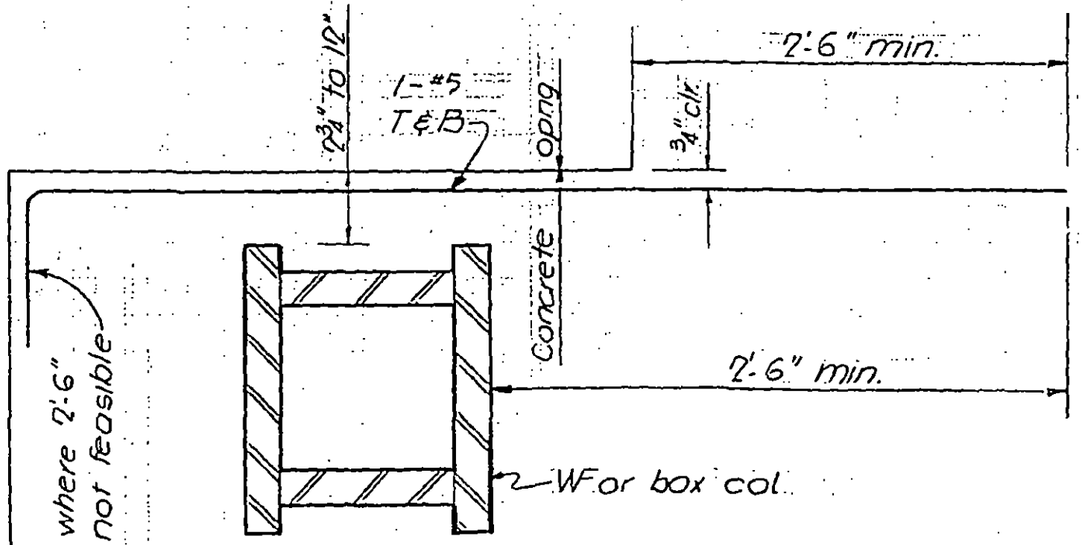

Detail A

Typical opening near Column

LICENSED PROFESSIONAL ENGINEER
LESLIE E. ROBERTSON
No. 34360
UNIVERSITY OF THE STATE OF NEW YORK

SKILLING - HELLE - CHRISTIANSEN - ROBERTSON Structural & Civil Engineers

PROJECT THE WORLD TRADE CENTER | TITLE TYPICAL SLAB OPENING DETAILS | DATE 3-1-68

REVISIONS

8-20-68

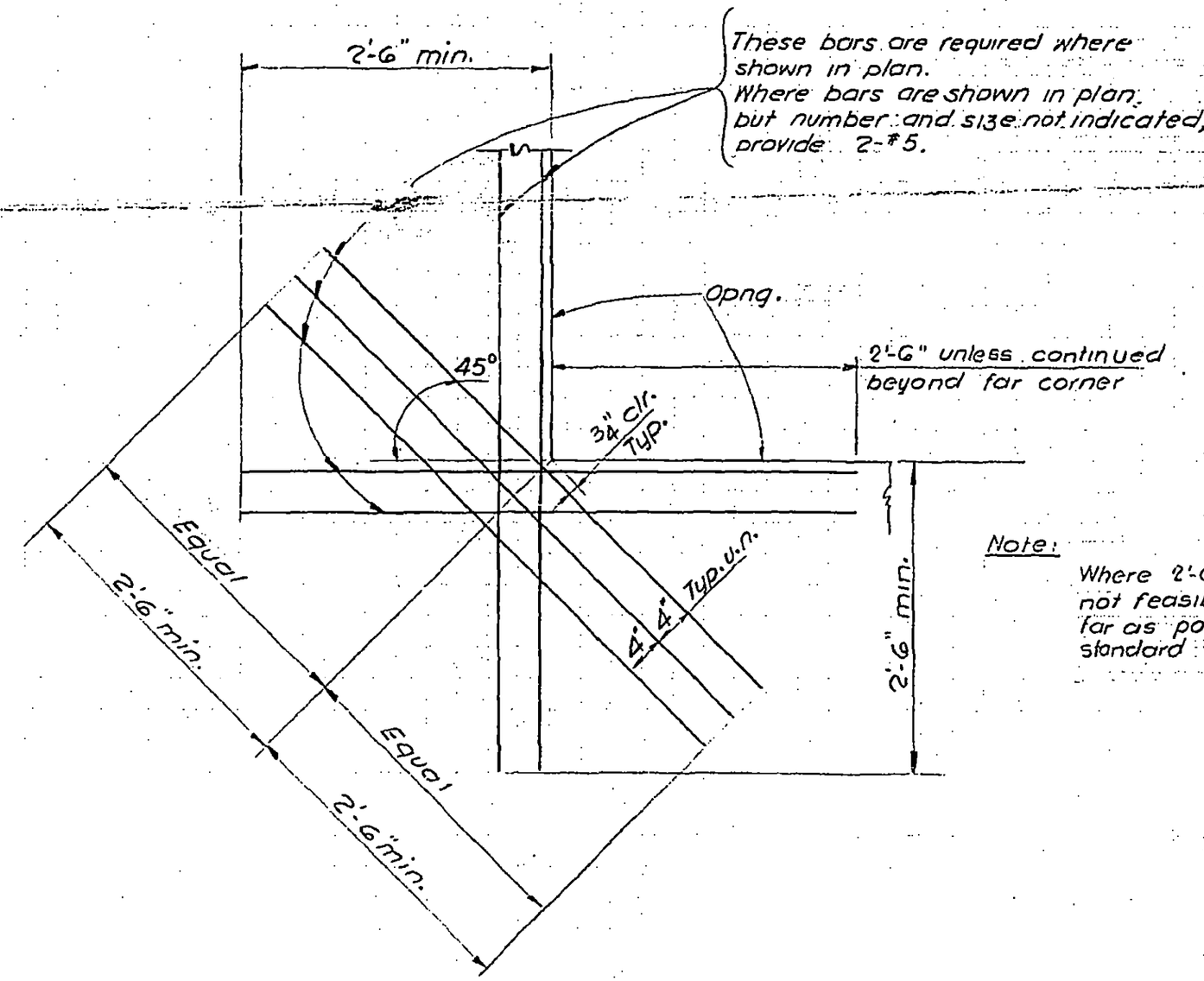

Note:

Where 2'-6" extension is not feasible, run bar as far as possible and provide standard hook.

Detail B

Additional Reinf. at Corner of Opening.

8-AB1-7.2

LICENSED PROFESSIONAL ENGINEER LESLIE E. ROBERTSON No. 34360 UNIVERSITY OF THE STATE OF NEW YORK

SKILLING - HELLE - CHRISTIANSEN - ROBERTSON Structural & Civil Engineers

PROJECT THE WORLD TRADE CENTER | TITLE TYPICAL CURB DETAIL | DATE 3-1-68

REVISIONS

8-20-68

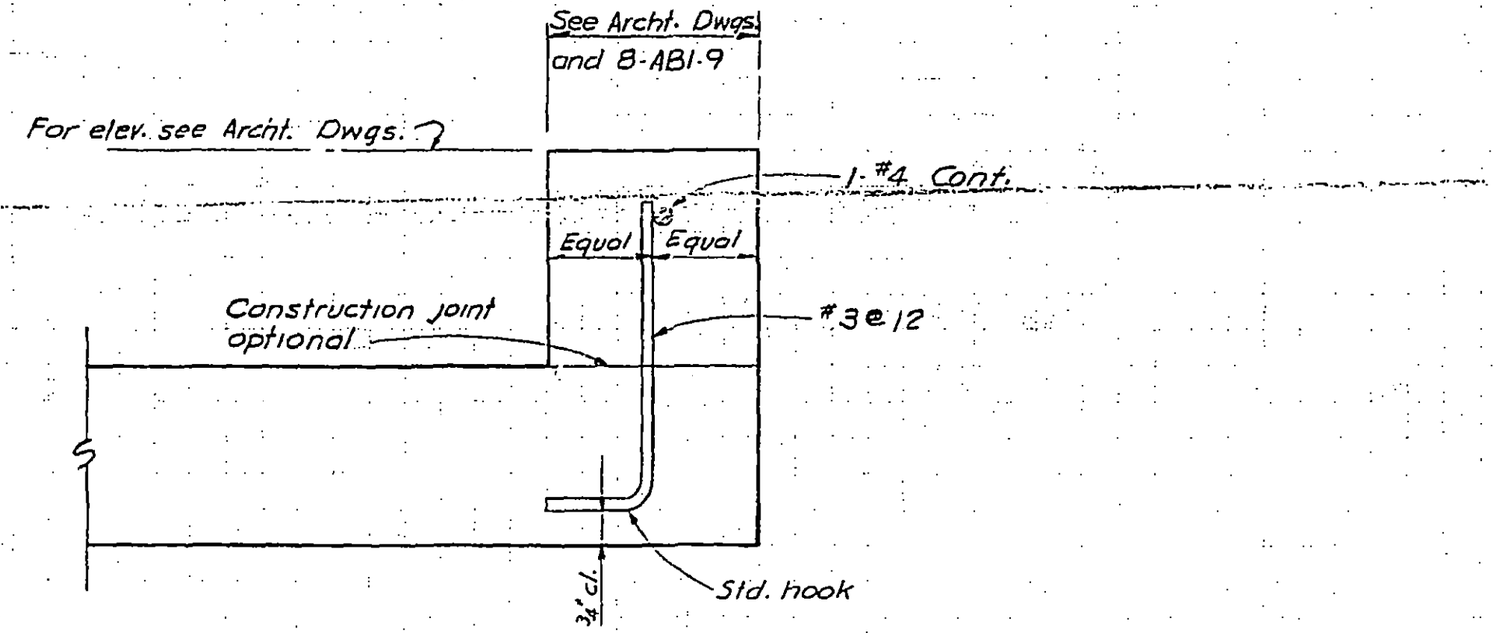

TYPICAL CURB

LICENSED PROFESSIONAL ENGINEER
LESLIE E. ROBERTSON
No. 34360
UNIVERSITY OF THE STATE OF NEW YORK

8-AB1-8

SKILLING - HELLE - CHRISTIANSEN - ROBERTSON Structural & Civil Engineers

PROJECT THE WORLD TRADE CENTER | TITLE TYPICAL SLAB OVER PIPE SHAFT | DATE 3-1-68

REVISIONS

1-28-69

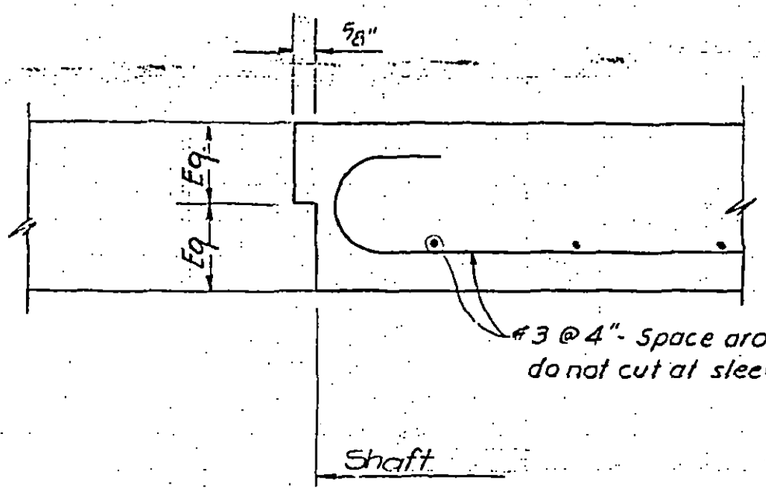

Detail A

Typ. Slab Opng

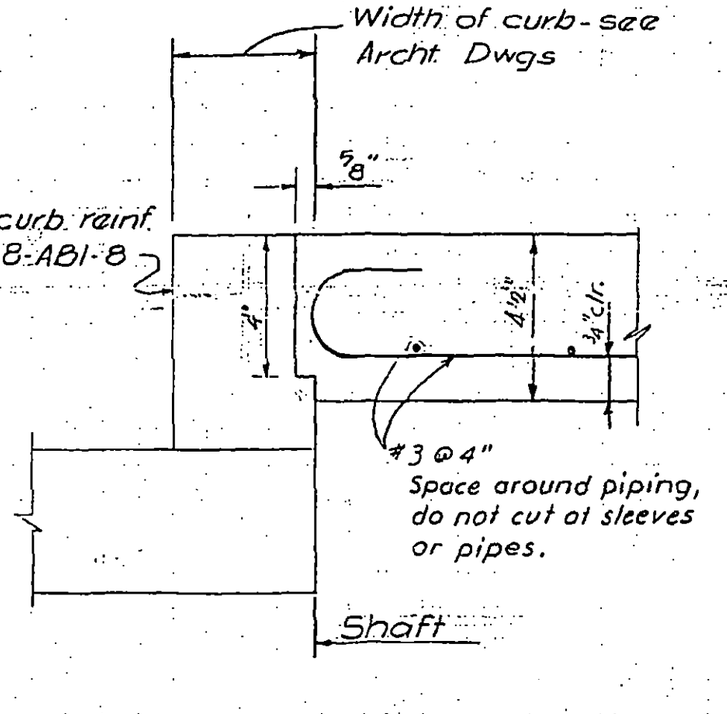

Detail B

Opng Surrounded By Curbs

REGISTERED PROFESSIONAL ENGINEER
LESLIE E. ROBERTSON
No. 34360
UNIVERSITY OF THE STATE OF NEW YORK

TYPICAL SLABS AT PIPE SHAFT

Notes:

1. Place slabs after installation and acceptance of pipes
2. For location see Archt. Dwgs.
3. Joints to be thoroughly cleaned of loose material and coated with holding agent prior to completion.
4. For conditions not shown in Details A, B & C on 8-AB1-9.1 & 9.2, similar details shall be prepared and submitted for approval in Shop Dwgs.

8-AB1-9.1

SKILLING, HELLE, CHRISTIANSEN, ROBERTSON — Structural & Civil Engineers

PROJECT: THE WORLD TRADE CENTER | TITLE: TYPICAL SLAB OVER PIPE SHAFT | DATE: 1-28-69

REVISIONS

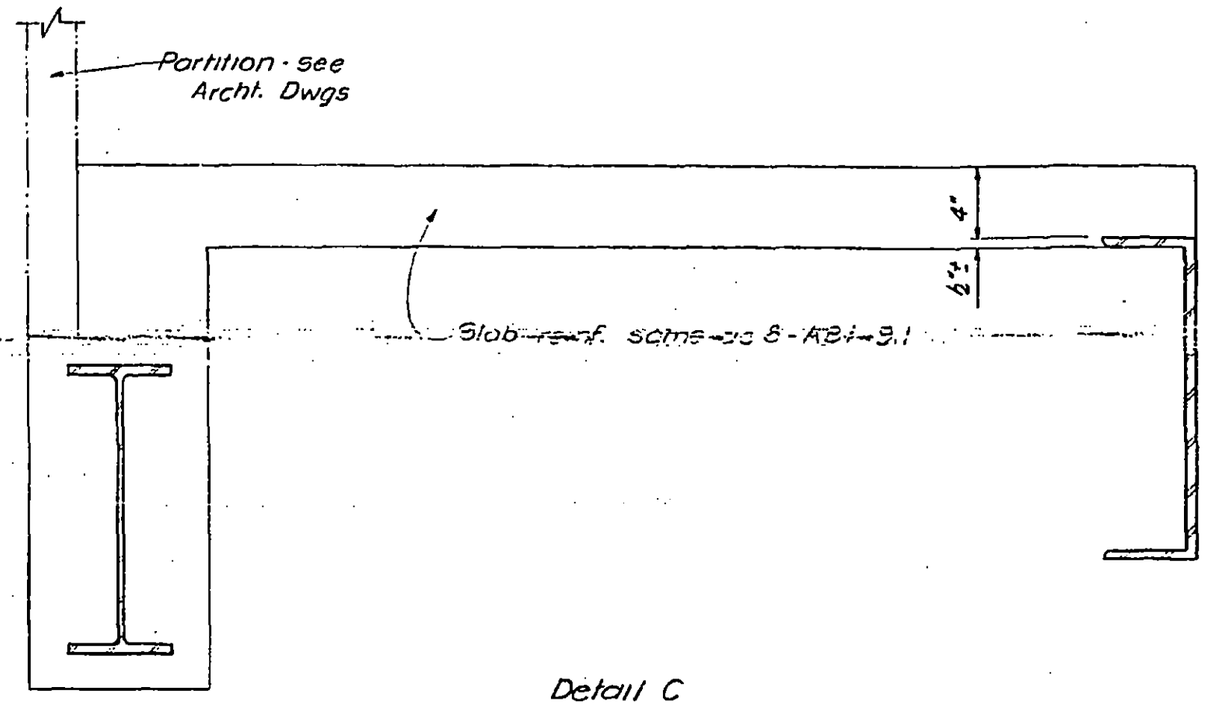

Detail C

Slab supported on Steel Flange

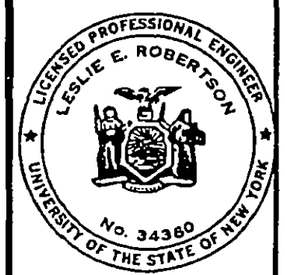

DESIGNED

DRAWN
G.T.H.

REVIEWED

S-AB1-9.2

SKILLING - HELLE - CHRISTIANSEN - ROBERTSON Structural & Civil Engineers

PROJECT THE WORLD TRADE CENTER | TITLE ADDITIONAL REINF. AT END OF RAISED STEEL BEAM | DATE 3-1-68

REVISIONS

8-20-68

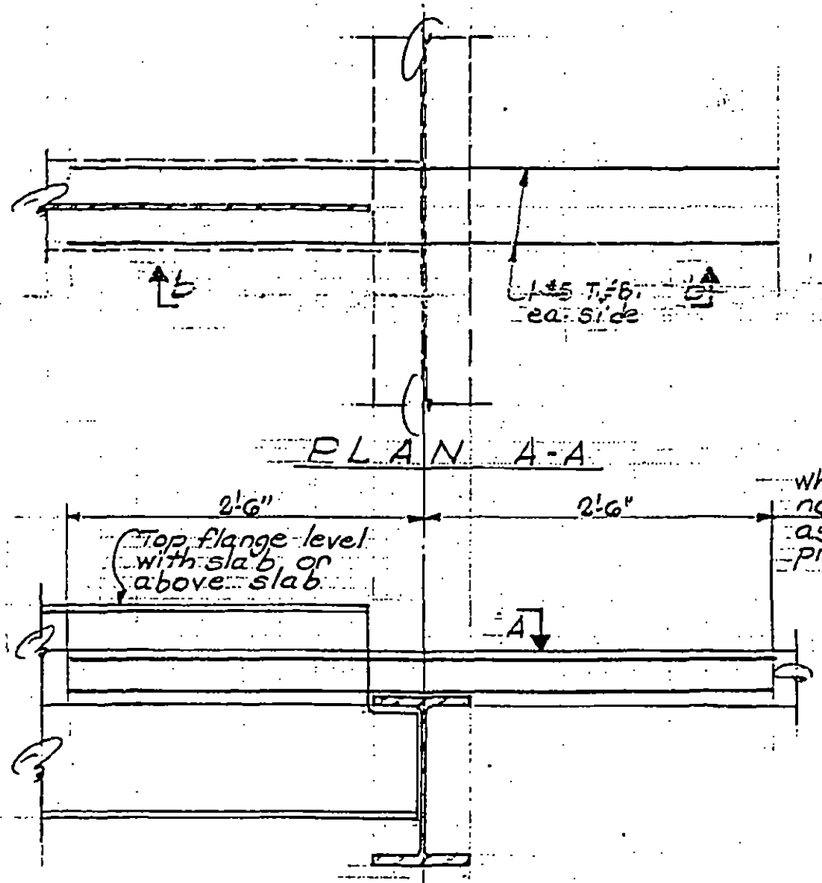

PLAN A-A

2'-6"

2'-6"

Top flange level with slab or above slab

where 2'-6" embedment is not possible, extend bar as far as possible and provide standard hook

Section b-b

NOTE:
Use the same detail if beams encased in concrete

LICENSED PROFESSIONAL ENGINEER
LESLIE E. ROBERTSON
No. 34360
UNIVERSITY OF THE STATE OF NEW YORK

S-AB1-10

SKILLING - HELLE - CHRISTIANSEN - ROBERTSON Structural & Civil Engineers

PROJECT THE WORLD TRADE CENTER | TITLE TYPICAL WALL DETAILS | DATE 3-1-68

REVISIONS

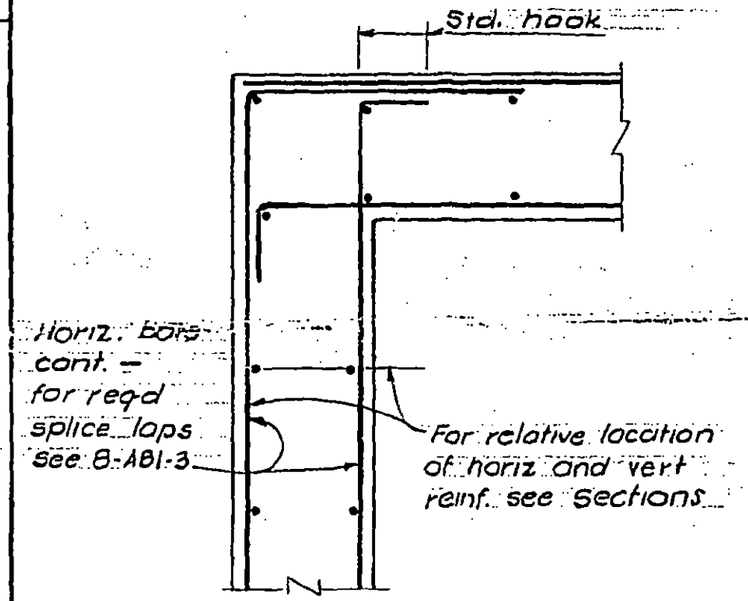

Detail A

TYP CORNER DET.

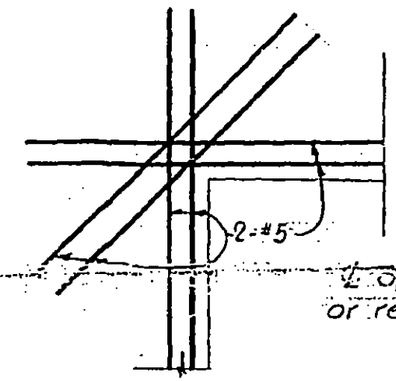

Detail B

ADDED BARS AT OPENINGS AND RECESSES

Notes to Detail B:

The following Notes do not apply where otherwise shown

1. For length of bars, spacing, and other details see 8-ABI-7.
2. Provide horiz. and vert. edge bars shown at recessed face for recesses, and at each face for openings.
3. Place diagonal bars shown in the middle of the thickness of the wall.
4. Omit horiz. and vert. edge bars for openings or recesses 2'-0" or less in diameter or diagonal dimension.
5. For openings & recesses 1'-0" or less in diameter or diagonal dimension, omit all added bars shown. Bend reinf. around opening, do not cut.

LICENSED PROFESSIONAL ENGINEER LESLIE E. ROBERTSON No. 34360 THE STATE OF NEW YORK

8-ABI-11

SKILLING - HELLE - CHRISTIANSEN - ROBERTSON Structural & Civil Engineers

PROJECT THE WORLD TRADE CENTER | TITLE TYPICAL DETAILS OF STEEL DECK | DATE 5-31-68

REVISIONS

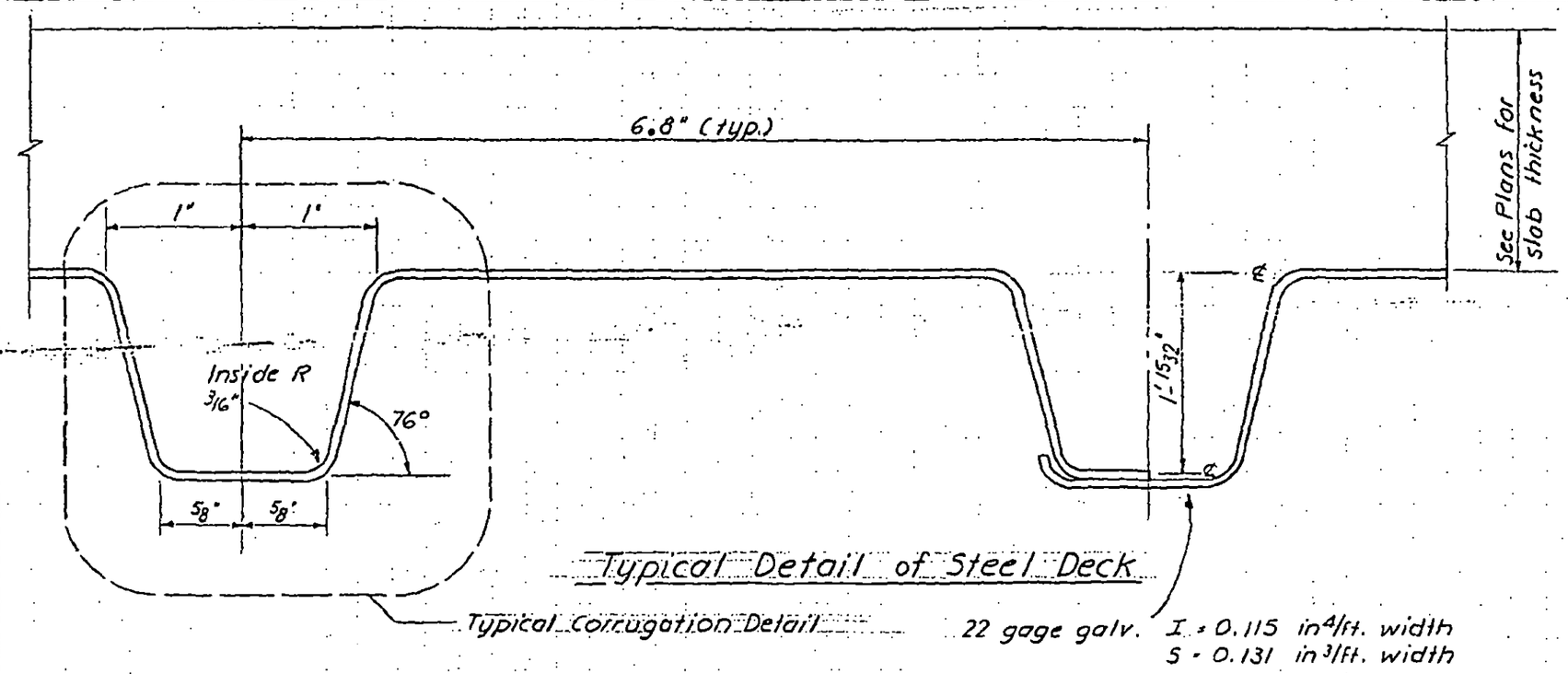

Typical Detail of Steel Deck

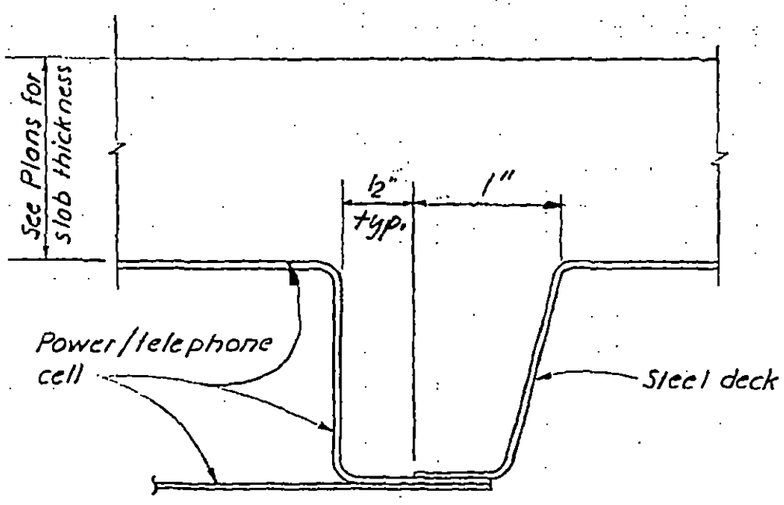

Typical Detail at Steel Deck - Power/Telephone Cell

LICENSED PROFESSIONAL ENGINEER LESLIE E. ROBERTSON No. 34360 UNIVERSITY OF THE STATE OF NEW YORK

5

8-AR1-12

SKILLING, HELLE, CHRISTIANSEN, ROBERTSON — Structural & Civil Engineers

PROJECT THE WORLD TRADE CENTER | TITLE EDGE DETAILS - ALTERNATE USING REMOVABLE FORMS INSTEAD OF METAL EDGING | DATE 9-5-68

REVISIONS

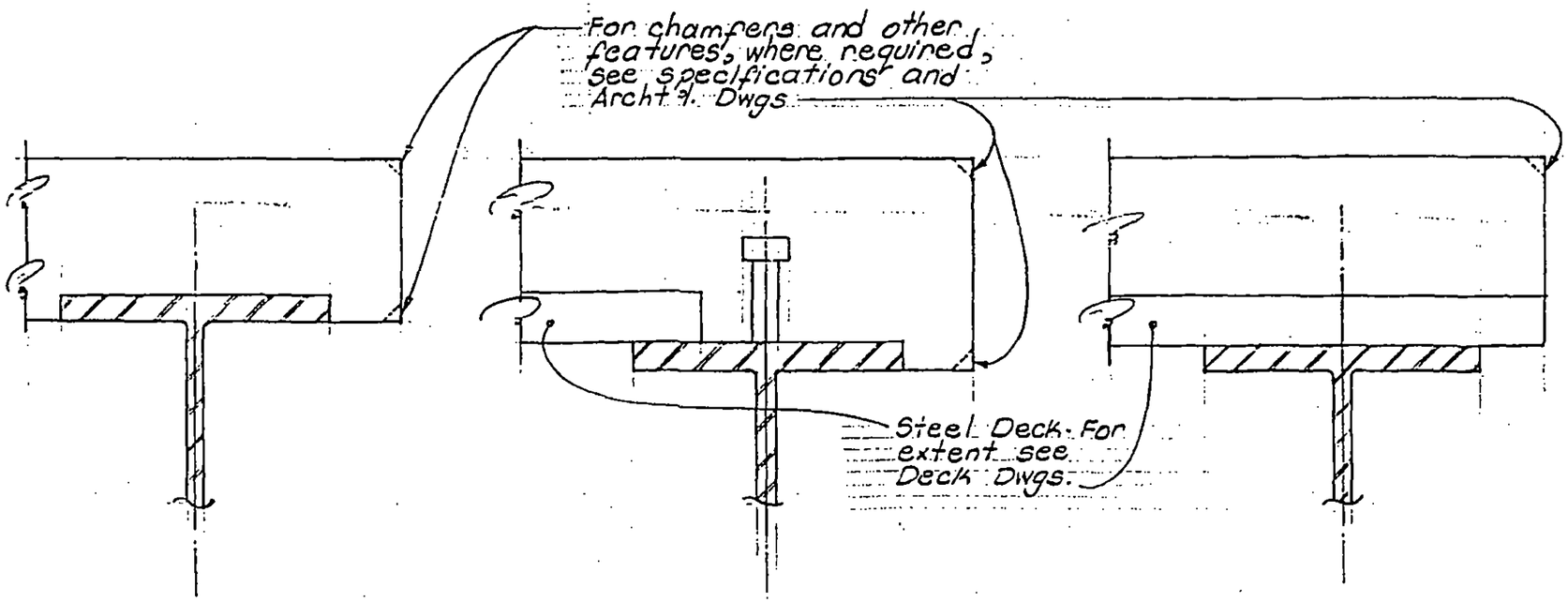

Note:
These details are an Alternate Method instead of Metal Edging shown in drawings, and are acceptable only where specifically allowed by Engineer.

LICENSED PROFESSIONAL ENGINEER
LESLIE E. ROBERTSON
No. 34360
UNIVERSITY OF THE STATE OF NEW YORK

DESIGNED

DRAWN

REVIEWED

8-AB1-13

WTCI-1059-LERA